I = $0.00

ORDER DATE | TERMS | SHIP DATE | WO#

CUST# | PHONE | FAX | SAB#

EMAIL | CELL

BILL TO

SHIP TO

TWILL LETTERING

See Twill Attachments ☐

Font | Size | FG Clr | / BG Clr | Location | Arrange | Characters

[No Twill]

STYLE	DESCRIPTION	QNTY

EMBROIDERY

See Embroidery Attachments ☑

[No Monogram]

Logo# | Stitch Count= | Logo Loc:

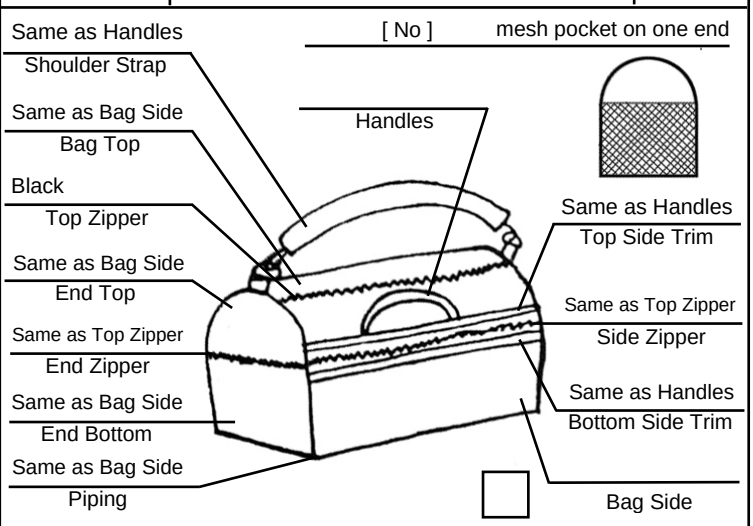

truWest, Inc.
POB 1855
Huntington
Beach, CA
92647-1846
800.322.3669
truWest.com

Copyright 2011

x	=	$0.00
x	=	$0.00
x	=	$0.00
x	=	$0.00
x	=	$0.00
x	=	$0.00

Est. Ship | Ship Ins. | Tax | Product Total $0.00

$0.00 | Est. Total Delivered $0.00

☐ CUSTOM ORDER - NOT RETURNABLE

☐ STOCK ITEM - NOT CUSTOMIZED

CC# | Exp | Add | Zip | Ver

I = $0.00

ORDER DATE

SHIP DATE

WO#

CUST#

SAB#

PRODUCTION WORKORDER

BILL TO

SHIP TO

TWILL LETTERING

See Twill Attachments ☐

Font Size FG Clr / BG Clr Location Arrange Characters

[No Twill]

STYLE	DESCRIPTION	QNTY

EMBROIDERY

See Embroidery Attachments ☑

[No Monogram]

Logo# Stitch Count= Logo Loc=

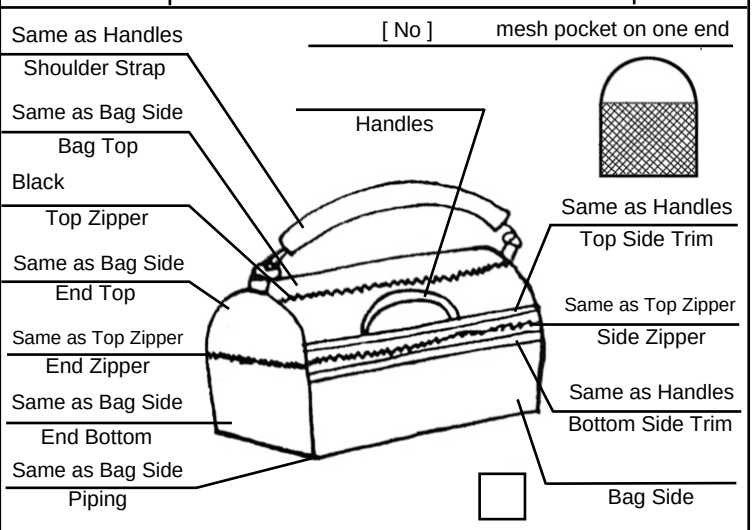

truWest, Inc.
POB 1855
Huntington
Beach, CA
92647-1846
800.322.3669
truWest.com
Copyright 2011

Bag Top	Same as Bag Side
Bag Side	
End Top	Same as Bag Side
End Bottom	Same as Bag Side
Top Zipper	Black
Side Zipper	Same as Top Zipper
End Zipper	Same as Top Zipper
Shoulder Strap	Same as Handles
Handles	
Top Side Trim	Same as Handles
Bottom Side Trim	Same as Handles
Piping	Same as Bag Side
mesh pocket on one end	[No]

☐ CUSTOM ORDER - NOT RETURNABLE

☐ STOCK ITEM - NOT CUSTOMIZED

I = $0.00

ORDER DATE

SHIP DATE

WO#

CUST# PHONE SAB#

PACKING SLIP

RETAIN FOR RE-ORDERS

SHIP TO

TWILL LETTERING

See Twill Attachments ☐

Font Size FG Clr / BG Clr Location Arrange Characters

[No Twill]

STYLE	DESCRIPTION	QNTY

EMBROIDERY

See Embroidery Attachments ☑

[No Monogram]

Logo# Stitch Count= Logo Loc=

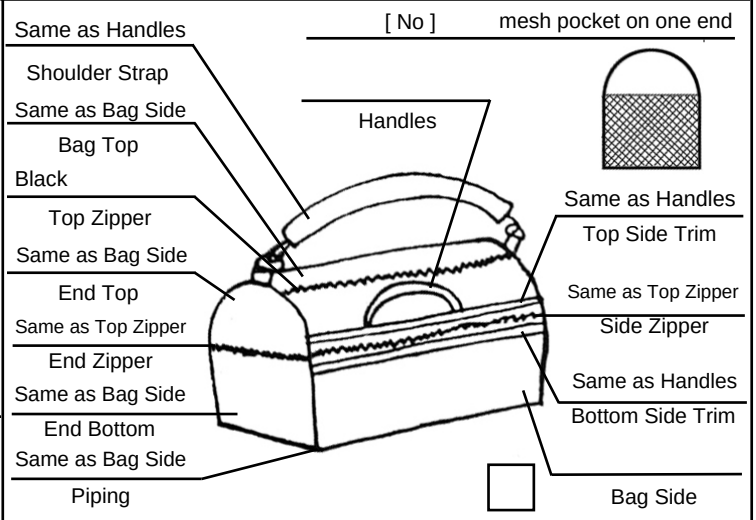

truWest, Inc.
POB 1855
Huntington
Beach, CA
92647-1846
800.322.3669
truWest.com
Copyright 2011

PACKING SLIP

RETAIN FOR RE-ORDERS

☐ CUSTOM ORDER - NOT RETURNABLE

☐ STOCK ITEM - NOT CUSTOMIZED