I = $0.00

ORDER DATE | TERMS | SHIP DATE | WO#

CUST# | PHONE | FAX | SAB#

EMAIL | CELL

BILL TO

SHIP TO

TWILL LETTERING

See Twill Attachments ☐

Font | Size | FG Clr | / BG Clr | Location | Arrange | Characters

[No Twill]

STYLE	DESCRIPTION	QNTY

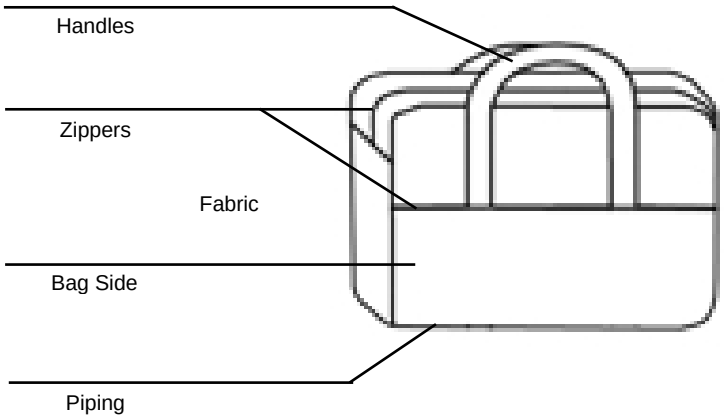

EMBROIDERY

See Embroidery Attachments ☐

[No Monogram]

Logo# | Stitch Count= | Logo Loc:

truWest, Inc.
POB 1855
Huntington
Beach, CA
92647-1846
800.322.3669
truWest.com
Copyright 2011

x = $0.00

x = $0.00

x = $0.00

x = $0.00

x = $0.00

x = $0.00

Est. Ship | Ship Ins. | Tax | Product Total $0.00

$0.00 | Est. Total Delivered $0.00

☐ CUSTOM ORDER - NOT RETURNABLE

☐ STOCK ITEM - NOT CUSTOMIZED

CC# | Exp | Add | Zip | Ver

pink office copy

tb13_tb13m.v1.pdf

I = $0.00

ORDER DATE

SHIP DATE

WO#

CUST#

SAB#

PRODUCTION WORKORDER

BILL TO

SHIP TO

TWILL LETTERING

See Twill Attachments ☐

Font Size FG Clr / BG Clr Location Arrange Characters

[No Twill]

STYLE	DESCRIPTION	QNTY

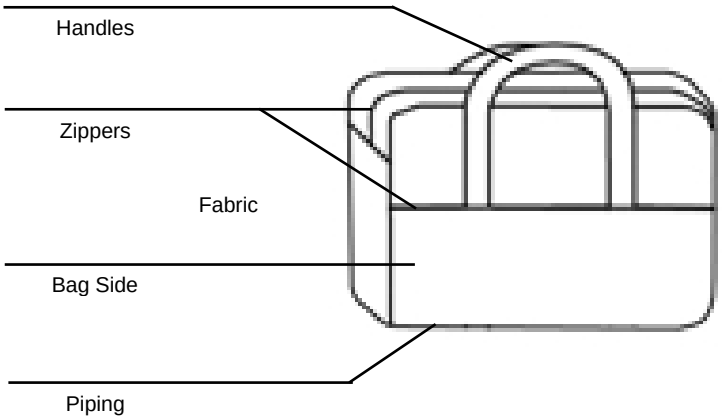

EMBROIDERY

See Embroidery Attachments ☐

[No Monogram]

Logo# Stitch Count= Logo Loc=

truWest, Inc.
POB 1855
Huntington
Beach, CA
92647-1846
800.322.3669
truWest.com
Copyright 2011

☐ CUSTOM ORDER - NOT RETURNABLE

☐ STOCK ITEM - NOT CUSTOMIZED

I = $0.00

ORDER DATE

SHIP DATE

WO#

CUST# PHONE SAB#

PACKING SLIP

RETAIN FOR RE-ORDERS

SHIP TO

TWILL LETTERING

See Twill Attachments ☐

Font Size FG Clr / BG Clr Location Arrange Characters

[No Twill]

STYLE	DESCRIPTION	QNTY

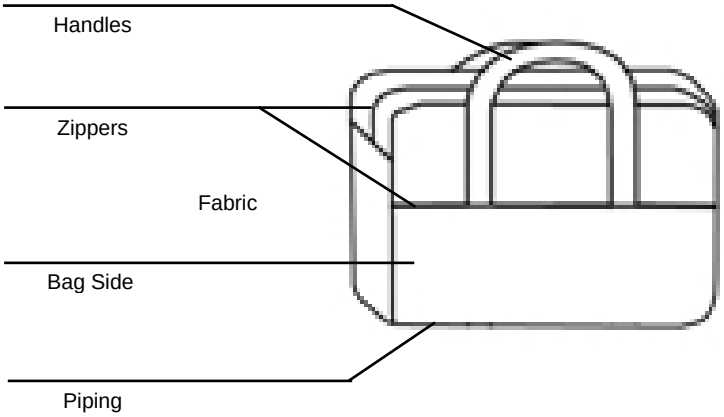

EMBROIDERY

See Embroidery Attachments ☐

[No Monogram]

Logo# Stitch Count= Logo Loc=

truWest, Inc.
POB 1855
Huntington
Beach, CA
92647-1846
800.322.3669
truWest.com
Copyright 2011

PACKING SLIP

RETAIN FOR RE-ORDERS

☐ CUSTOM ORDER - NOT RETURNABLE

☐ STOCK ITEM - NOT CUSTOMIZED